IOTAFLOW
SYSTEMS PVT. LTD

Conical shaped Flow meter User Manual

" If You Want To Manage It, Measure It "

www.iotaflow.com

Contents

1.0 GENERAL 1
1.1 Introduction 1
1.2 Principles Of Operation 1
1.3 Reshaping The Velocity Profile 1

2.0 FEATURES 2
2.1 High Accuracy 2
2.2 Repeatability 2
2.3 Turndown 2
2.4 Installation Requirements 3
2.5 Long Term Performance 3
2.6 Signal Stability 3
2.7 Low Permanent Pressure Loss 3
2.8 Sizing 4
2.9 No Areas of Stagnation 4
2.10 Mixing 4

3.0 THE V-CONE FLOW MEASUREMENT SYSTEM 5
3.1 Application Data 5
3.2 Flow Calculations 5
3.3 Application Sizing 7
3.4 Calibration 7
3.5 Materials Of Construction 7
3.6 Valve Manifolds 7
3.7 Secondary And Tertiary Instrumentation 8
3.8 Meter Tag 8

4.0 INSTALLATION 9
4.1 Scope 9
4.2 Safety 9
4.3 Unpacking 9
4.4 Orientation 9
4.5 Piping Specification 9
4.6 Piping Requirements 10
4.7 Isolation (Block) Valves 10
4.8 Valve Manifolds 10
4.9 Installation 11
4.10 Pressure Taps 11
4.11 Remote Seals or Chemical Seals 12
4.12 Impulse Line: General 12
4.13 Impulse Line: Process Industries 12
4.14 Impulse Line: Steam Applications 12
4.15 Insulation 12
4.16 Horizontal Piping Installations: Condensing Vapors . 13
4.17 Vertical Piping Installations: Condensing vapors, i.e. steam 14
4.18 Calibration Compensated Installation 14
4.19 Vertical Down Flow Piping Installations: Condensing Vapors, i.e. Steam 15
4.20 Supporting Manifold Blocks and Dual Transmitters . 16
4.21 Zeroing DP Pressure Transmitters Following Installation For Steam Flow Applications 17
4.22 Zeroing Low Range Transmitters 17
4.23 Differential Pressure Measurement 18
4.24 Temperature And Pressure Measurement 18

5.0 DIMENSIONS 19
5.1 Face To Face Dimensions 19

6.0 MODEL SELECTIONS 20
6.1 Precision Tube V-Cone Model Template 20
6.1.1 North American Region 20
6.1.2 Latin American Region 21
6.1.3 European Region 22
6.2 V-Cone Materials 23

7.0 MAINTENANCE 23
7.1 Periodic Maintenance 23

8.0 TROUBLESHOOTING 23
8.1 Troubleshooting a V-Cone System On-Site 23

9.0 EXACTSTEAM V-CONE LITERATURE 26
9.1 ExactSteam V-Cone Specification Sheets 26

10.0 APPENDICES 27
10.1 V-Cone Installation Guide: Upstream and Downstream Minimum Straight Pipe Run Recommendations 27

MANUFACTURER'S WARRANTY 29

1.0 General

1.1 Introduction

1.2 Principles Of Operation

The V-Cone is a differential pressure type flowmeter. Basic theories behind differential pressure type flowmeters have existed for over a century. The principal theory among these is Bernoulli's theorem for the conservation of energy in a closed pipe. This states that for a constant flow, the pressure in a pipe is inversely proportional to the square of the velocity in the pipe. Simply, the pressure decreases as the velocity increases. For instance, as the fluid approaches the V-Cone meter, it will have a pressure of P_1. As the fluid velocity increases at the constricted area of the V-Cone, the pressure drops to P_2, as shown in Figure 1. Both P_1 and P_2 are measured at the V-Cone's taps using a variety of differential pressure transducers. The Dp created by a V-Cone will increase and decrease exponentially with the flow velocity. As the constriction takes up more of the pipe cross-sectional area, more differential pressure will be created at the same flowrates. The beta ratio equals the flow area at the largest cross section of the cone (converted to an equivalent diameter) divided by the meter's inside diameter (see the V-Cone Beta Ratio calculation in section 3.2).

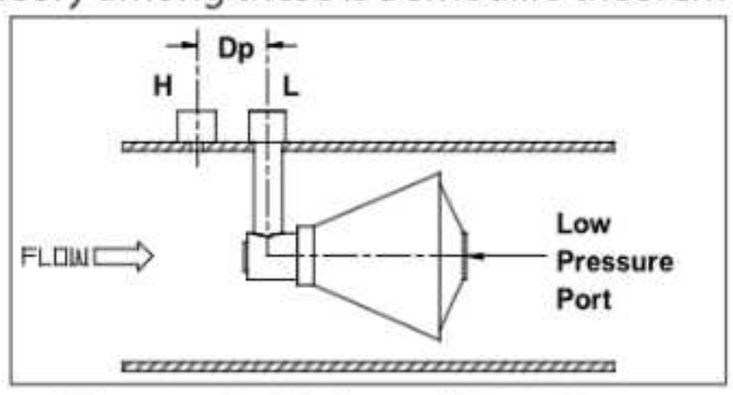

Figure 1. High and Low Ports

1.3 Reshaping The Velocity Profile

The V-Cone is similar to other differential pressure (Dp) meters in the equations of flow that it uses. V-Cone geometry, however, is quite different from traditional Dp meters. The V-Cone constricts the flow by positioning a cone in the center of the pipe.

This forces the flow in the center of the pipe to flow around the cone. This geometry presents many advantages over the traditional concentric Dp meter. The actual shape of the cone has been continuously evaluated and tested for over ten years to provide the best performance under differing circumstances.

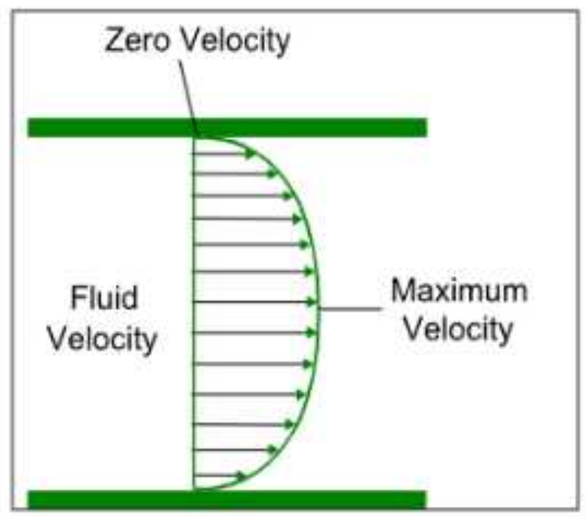

Figure 2. Velocity Profile

One must understand the idea of a flow profile in a pipe to understand the performance of the V-Cone. If the flow in a long pipe is not subject to any obstructions or disturbances, it is well-developed flow. If a line passes across the diameter of this well-developed flow, the velocity at each point on that line would be different. The velocity would be zero at the wall of the pipe, maximum at the center of the pipe, and zero again at the opposite wall. This is due to friction at the pipe walls that slows the fluid as it passes. Since the cone is suspended in the center of the pipe, it interacts directly with the "high velocity core" of the flow. The cone forces the high velocity core to mix with the lower velocity flows closer to the pipe walls. Other Dp meters have centrally located openings and do not interact with this high velocity core. This is an important advantage to the V-Cone at lower flowrates. As the flowrate

decreases, the V-Cone continues to interact with the highest velocity in the pipe. Other Dp meters may lose their useful Dp signal at flows where the V-Cone can still produce one.

The pipe flow profile in actual installations is rarely ideal. There are many installations where a flowmeter exists in flow that is not well developed. Practically any changes to the piping, such as elbows, valves, reductions, expansions, pumps, and tees can disturb well-developed flow. Trying to measure disturbed flow can create substantial errors for other flowmeter technologies. The V-Cone overcomes this by reshaping the velocity profile upstream of the cone. This is a benefit derived from the cone's contoured shape and position in the line. As the flow approaches the cone, the flow profile "flattens" toward the shape of a well-developed profile.

The V-Cone can flatten the flow profile under extreme conditions, such as a single elbow or double elbows out-of-plane, positioned closely upstream of the meter. This means that as different flow profiles approach the cone, there will always be a predictable flow profile at the cone. This ensures accurate measurement even in non-ideal conditions.

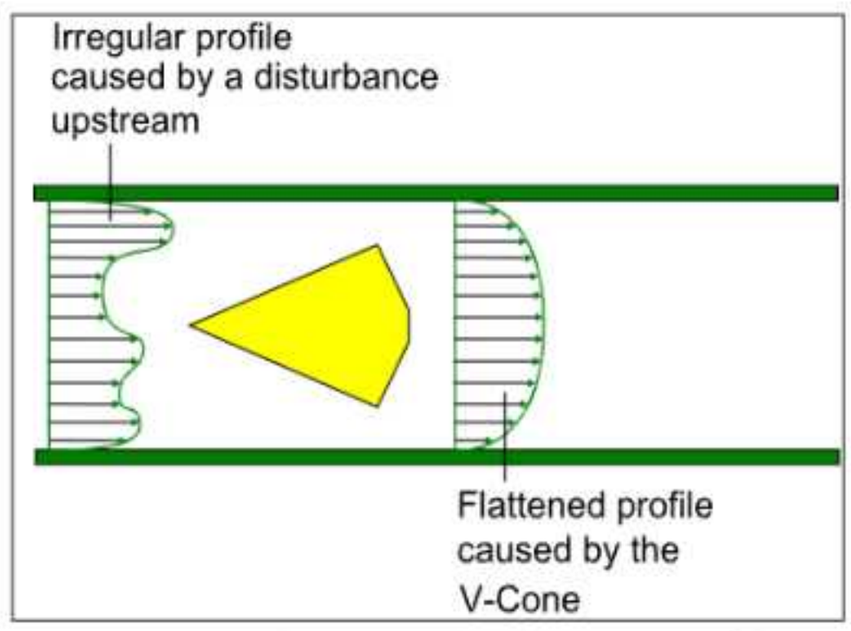

Figure 3. Flattened Velocity Profile

2.0 Features

2.1 High Accuracy

The V-Cone primary element can be accurate to ±0.5% of flow rate reading and the total system can be accurate to ±1.0%. The level of accuracy is dependent to a degree on application parameters and secondary instrumentation.

Accuracy statements of percent of actual flow rate means that the measurement uncertainty is within the given percent value within the stated range for the flowmeter.

2.2 Repeatability

The V-Cone primary element exhibits excellent repeatability of ±0.1% or better.

Repeatability is a flowmeter's ability to repeat it's accuracy at a given flow rate.

2.3 Turndown

The turndown of the V-Cone can reach far beyond traditional Dp meters. A typical turndown for a V-Cone is 10 to 1. Greater turndowns are attainable. Flows with Reynolds numbers as low as 8000 will produce a linear signal. Lower Reynolds number ranges are measurable and are repeatable by applying a curve fit to the measured Dp, derived from calibration over a specific Reynolds number range.

2.4 Installation Requirements

Since the V-Cone can flatten the velocity profile, it can function much closer to upstream disturbances than other Dp meters. The recommended installation for the V-Cone is zero to three diameters of straight run upstream and zero to one diameter downstream. This can be a major benefit to users with larger, more expensive line sizes or users which have small run lengths. McCrometer conducted performance tests of the V-Cone downstream of a single 90° elbow and two close coupled 90° elbows out of plane. These tests show that the V-Cone can be installed adjacent to either single elbows or two elbows out of plane without sacrificing accuracy.

For specific installation recommendations, see appendices.

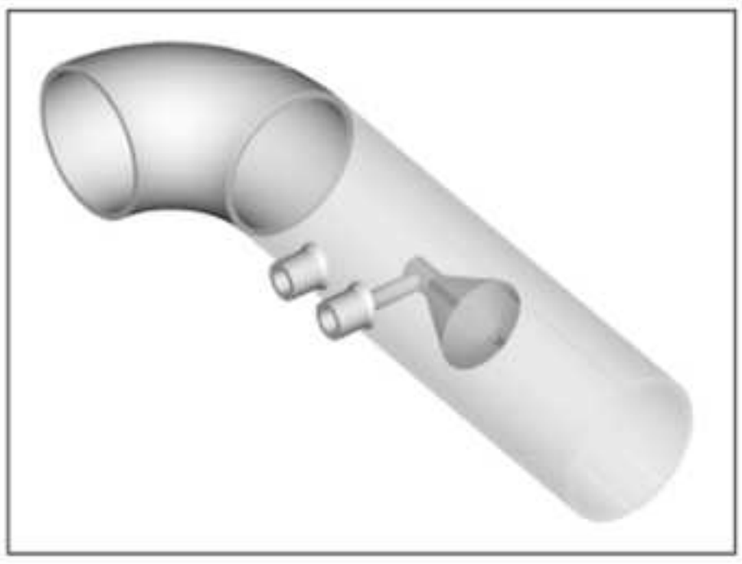

Figure 4. Single Elbow and V-Cone

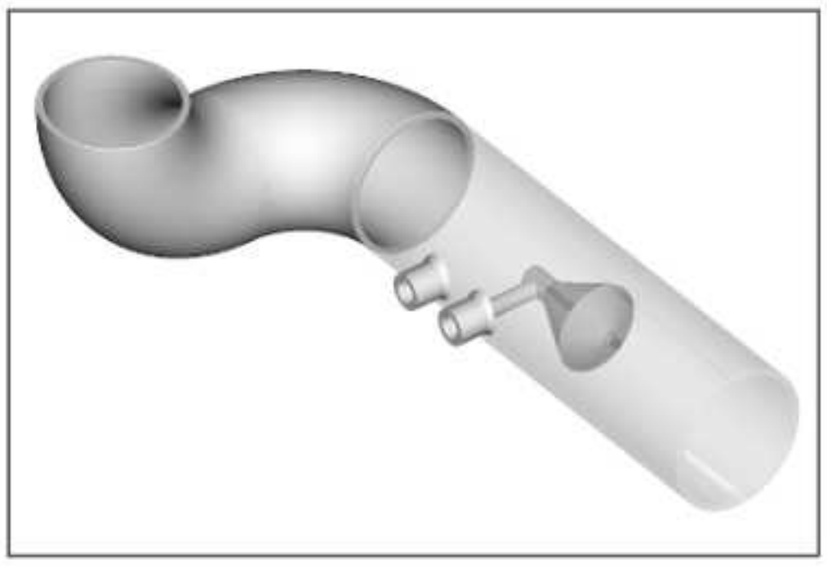

Figure 5. Double Elbow and V-Cone

2.5 Long Term Performance

The contoured shape of the cone constricts the flow without impacting the flow against an abrupt surface. A boundary layer forms along the cone and directs the fluid away from the beta edge. This means the beta edge will not be as subject to the usual wear by unclean fluids, as is the case with an orifice plate. The beta ratio will then remain unchanged and the calibration of the meter will be accurate for a much longer time.

2.6 Signal Stability

Every Dp meter has a "signal bounce". This means that even in steady flow, the signal generated by the primary element will fluctuate a certain amount. On a typical orifice plate, the vortices that form just after the plate are long. These long vortices create a high amplitude, low frequency signal from the orifice plate. This could disturb the Dp readings from the meter. The V-Cone forms very short vortices as the flow passes the cone. These short vortices create a low amplitude, high frequency signal. This translates into a signal with high stability from the V-Cone. Representative signals from a V-Cone and from a typical orifice plate are shown in Figure 6.

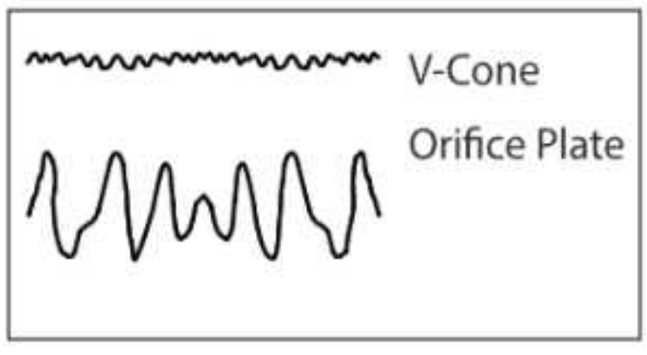

Figure 6. Signal Stability

2.7 Low Permanent Pressure Loss

Without the impact of an abrupt surface, the permanent pressure loss is lower than a typical orifice plate meter. Also, the signal stability of the V-Cone allows the recommended full scale Dp signal to be lower for the V-Cone than other Dp meters. This will lower the permanent pressure loss.

2.8 Sizing

The unique geometry of the V-Cone allows for a wide range of beta ratios. Standard beta ratios range from 0.45, 0.55, 0.65, 0.75, and 0.80.

2.9 No Areas of Stagnation

The "swept through" design of the cone does not allow for areas of stagnation where debris, condensation or particles from the fluid could accumulate.

2.10 Mixing

The short vortices described in section 2.6 mix the fluid thoroughly just downstream of the cone. The V-Cone is currently used in many applications as a static mixer where instant and complete mixing are necessary.

3.0

The V-Cone Flow Measurement System

3.1 Application Data

The customer must provide application parameters so that the appropriate V-Cone flowmeter may be selected. McCrometer has an extensive meter performance database of fluid properties which can be utilized for sizing purposes.

3.2 Flow Calculations

Nomenclature

Symbol	Description	English Units	Metric Units
α	Material Thermal Expansion α or α_{cone}, α_{pipe} (alpha)	$^{\circ}R^{-1}$	$^{\circ}R^{-1}$
β	Beta Ratio	-	-
C_D	Flowmeter Coefficient	-	-
d	Cone Outside Diameter	in	mm
D	Pipe Inside Diameter	in	mm
ΔP	Differential Pressure (DP)	inWC	mbar
F_a	Material Thermal Expansion Factor	-	-
k	Gas Isentropic Exponent	-	-
k_1	Flow Constant	$\sqrt{\frac{lbm \cdot ft^3}{s^2 \cdot inWC}}$	$\sqrt{\frac{kg \cdot m^3}{s^2 \cdot mbar}}$
μ	Viscosity	cP	cP
P	Operating Pressure	psiA	barA
Q	Actual Volume Flow	ACFS	m^3/s
Q_m	Mass Flow	Lb/s	Kg/s
Re	Reynolds Number	-	-
ρ	Flowing Density (rho)	lbm/ft^3	kg/m^3
S_g	Specific Gravity of the Gas	-	-
T	Operating Temperature	$^{\circ}R$	K
T_d	Deviation from Standard Temperature (°R)	$T_d = T - 527.67$	$T_d = T - 527.67$
U_1	Unit Conversion	0.0360912 psiA/inWC	0.001 barA/mbar
U_2	Unit Conversion	144 in^2/ft^2	1,000,000 mm^2/m^2
U_3	Unit Conversion	167.213 lbm /s^2 ft inWC	100 kg/m s^2 mbar
U_4	Unit Conversion	124.0137 cP ft s / lbm	1
U_5	Unit Conversion	2.6988 $^{\circ}R$ lbm / ft^3 psiA	348.338 K kg / m^3 barA
v	Velocity	ft/s	m/s
Y	Gas Expansion Factor	-	-
Z	Gas Compressibility	-	-

General Flow Calculations

3.2.1	V-Cone Beta Ratio	$\beta = \sqrt{1 - \frac{d^2}{D^2}}$	β from sizing report
3.2.2	Flow Constant	$k_1 = \frac{\pi \cdot \sqrt{2 \cdot U_3}}{4 \cdot U_2} \cdot \frac{D^2 \cdot \beta^2}{\sqrt{1 - \beta^4}}$	
3.2.3	Material Thermal Expansion Factor	$F_a = 1 + 2 \cdot \alpha \cdot T_d$	See note 1
3.2.4	Material Thermal Expansion Factor if cone and main pipe are made of different materials	$F_a = \frac{D^2 - d^2}{[(1 - \alpha_{pipe}) \cdot T_d] \cdot D^2 - [(1 - \alpha_{cone} \cdot) T_d] \cdot d^2}$	See note 1
3.2.5	Pipeline Velocity	$v = \frac{4 \cdot U_2 \cdot Q}{\pi \cdot D^2}$	
3.2.6	Reynolds Number	$\mathrm{Re} = U_4 \frac{v \cdot D \cdot \rho}{\mu}$	Dimensionless number which can be used to correlate meter calibration in different fluids
3.2.7	V-Cone Gas Expansion Factor	$Y = 1 - (0.649 + 0.696 \cdot \beta^4) \frac{U_1 \cdot \Delta P}{k \cdot P}$	
3.2.8	Steam Density	$\rho =$ from steam tables	
3.2.9	Gas Density	$\rho = U_5 \frac{S_g \cdot P}{Z \cdot T}$	See note 2
3.2.10	Actual Volume Flowrate	$Q = F_a \cdot C_D \cdot Y \cdot k_1 \cdot \sqrt{\frac{\Delta P}{\rho}}$	
3.2.11	Mass Flow	$Q_m = Q * \rho$	

Notes:

1. Material Thermal Expansion – The thermal expansion equations correct for dimensional changes which occur as the operating temperature deviates from the base temperature of 68° F (see 3.2.3 and 3.2.4) The Fa factor can be excluded from the flow equation if the operating temperature is:

   < 100° Fahrenheit , < 559.67° Rankine , < 37.78° Celsius, < 310.93 K.

   If the Fa factor is significant and the operating temperature is stable then a constant Fa value can be used. If the Fa factor is significant and the temperature varies then an Fa factor should be calculated prior to every flow calculation.

2. This equation is for ideal gases. It can be used for steam if steam tables are not available in your computer system. There will be a slight error when used for steam. The error will depend on your operating temperature and pressure.

3.3 Application Sizing

Each V-Cone is tailored to its specific application. Before manufacturing, every V-Cone will have a "sizing" completed according to the physical parameters of the application. The computer generated sizing uses application data as a basis to predict the V-Cone's performance. Full scale DP, working flow range, expected accuracy, and predicted pressure loss are determined by the sizing process.

3.4 Calibration

McCrometer has 4 V-Cone test lines and can calibrate meters from 1/2" to 48" with a high degree of accuracy.

Test Lines:

Location	Type	Size Range	Flow Range	Fluid
Hemet, CA	Gravimetric	½" to 3"	195 GPM	Water
Hemet, CA	Gravimetric	3" to 16"	3100 GPM	Water
Hemet, CA	Transfer Standard	½" to 2"	150 SCFM	Air
Porterville, CA	Volumetric	16" to 48"	40,000 GPM	Water

McCrometer recommends calibration of every V-Cone meter. Optimal accuracy is achieved when a full flow range calibration is performed. In high Reynolds number applications this may require an outside gas calibration. As an alternative, McCrometer has developed a proprietary method to accurately extrapolate flow calibration data. In cases where the meter cannot be calibrated McCrometer can estimate the meter C_f based on 20 plus years of data.

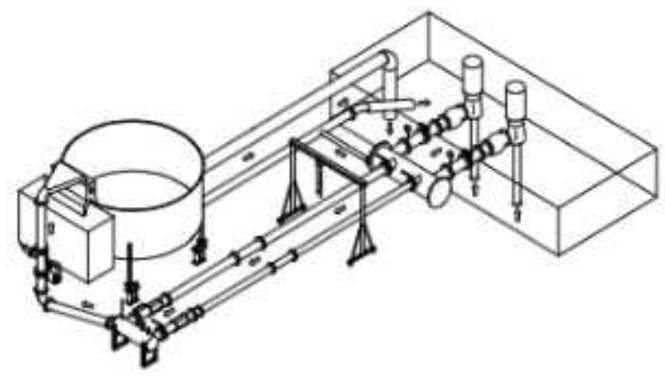

Figure 7. Calibration Facility 40k Gravimetric

3.5 Materials Of Construction

All materials used for V-Cone flowmeters are certified. Materials furnished to McCrometer include a certified material test report (CMTR) from the original material manufacturer. The test reports include material composition and applicable material grades. Upon request copies of the material test reports can be supplied to our customers. See section 6 for typical materials of construction.

3.6 Valve Manifolds

McCrometer recommends a three valve or five valve manifold as part of a V-Cone flow measurement system. Manifolds allow for in-line transmitter calibrations, isolation of the transmitter from the transmission lines, without depressurizing the line, and in-line purging of transmission lines.

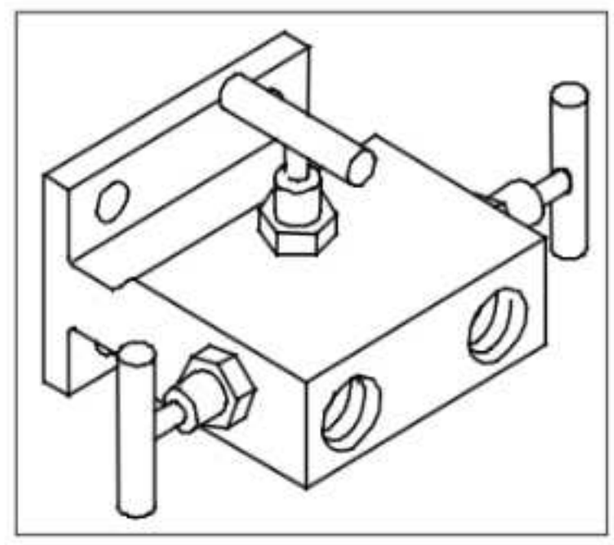

Figure 8. Manifold

3.7 Secondary And Tertiary Instrumentation

A differential pressure transmitter measures the differential pressure signal from the primary element. Once the signal is measured, the transmitter generates an electronic signal that is then interpreted by a flow monitor or other process control system. For compressible fluids, line pressure and temperature measurements are generally required for accurate flow measurement. McCrometer offers the following flow measurement instrumentation: differential pressure transmitters, flow computers, and pressure and temperature sensors for mass flow measurement.

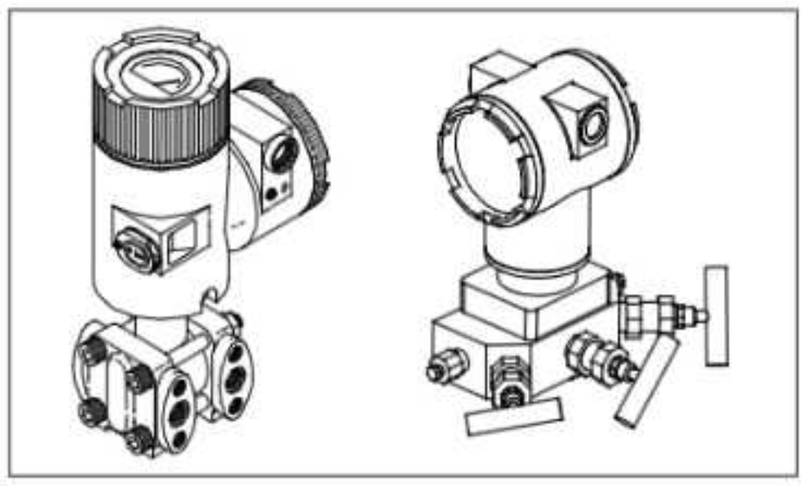

Figure 9. Typical Dp Transmitters

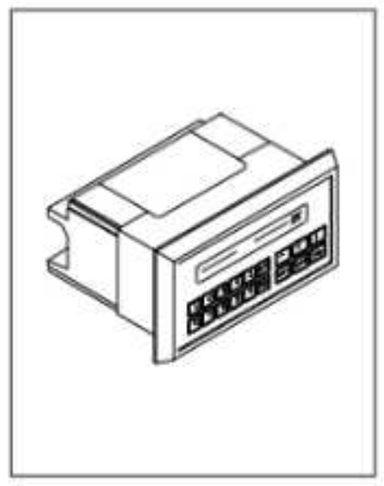

Figure 10. Flow Computer

3.8 Meter Tag

Each V-Cone meter comes with an information tag fixed to the body of the tube. Figure 11 below shows examples of the standard tag and the tag showing PED Certification.

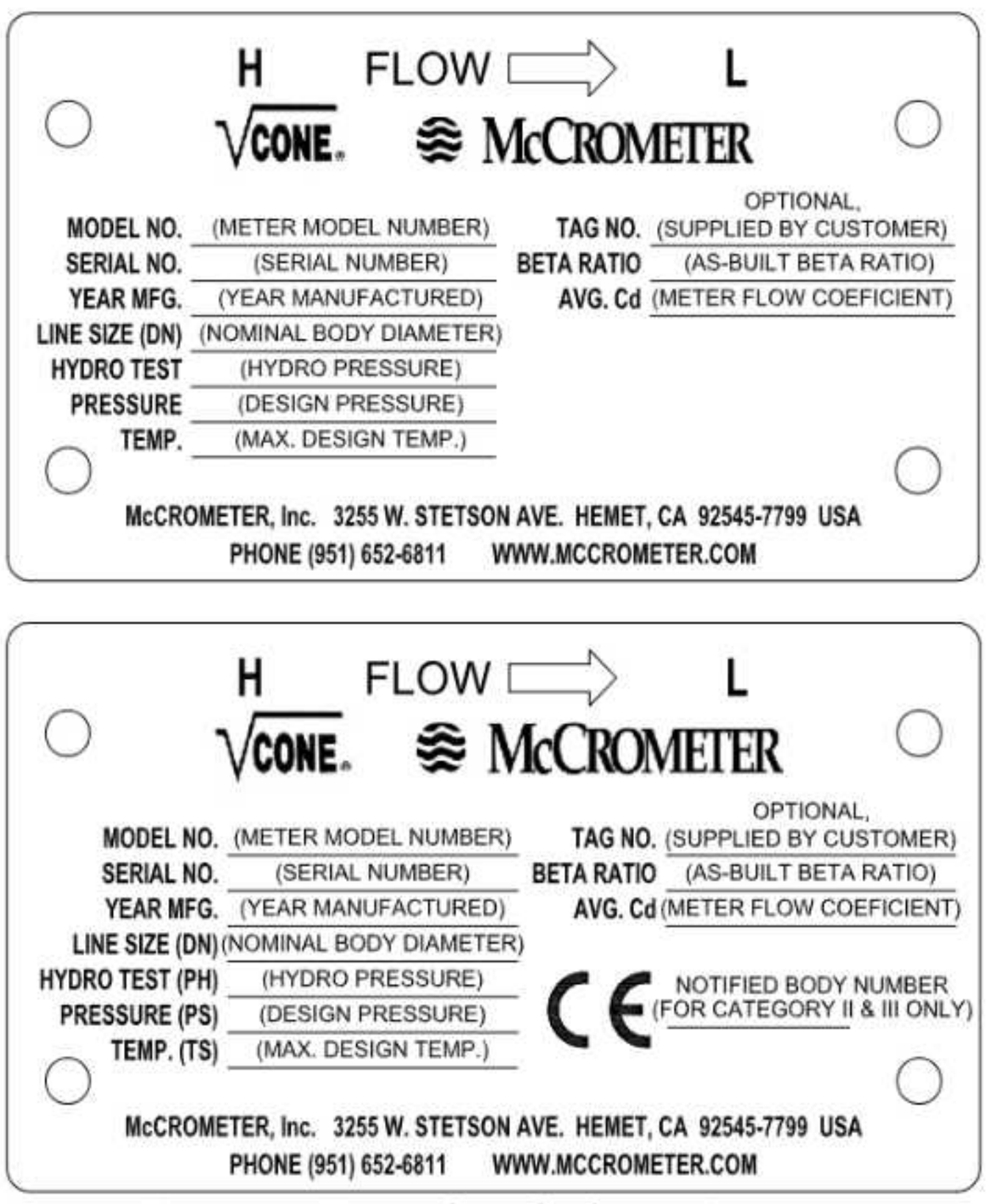

Figure 11. Examples of information tags

4.0 Installation

4.1 Scope

This section provides recommendations for impulse tubing connections allowing the differential pressure generated by the V-Cone to be transmitted to the secondary device, normally a Differential Pressure Transmitter. The connection methods are designed to minimize errors in the pressure signal.

4.2 Safety

The differential pressure signal must be transmitted in a safe manner, within piping, tubing, or the manifold block, to the secondary device. The fluid between the primary and secondary device must be safely contained. Safe containment of the fluid requires strict adherence to the applicable standards and codes, proper materials selection, including the gaskets, and acceptable fabrication methodology.

WARNING! When installing the impulse lines in the high and low pressure taps, NEVER use dissimilar metals as this can cause corrosion and the rupture of the impulse line and can cause serious injury or death.

- Any person installing, inspecting, or maintaining a McCrometer flowmeter should have an under standing of piping configurations and systems under pressure.
- The high and low pressure ports and/or optional instrumentation ports may be fitted with plastic thread protector plugs. These must be removed prior to pressurizing the system. Failure to do so may result in serious injury.
- Before adjusting or removing any meter, be certain the system has been depressurized completely. Never attempt to remove a meter under pressure!
- Be careful when lifting meters. Meters can cause serious injury if lifted incorrectly or dropped.
- Use only necessary and appropriate tools when working on a meter.
- Properly secure all connections before starting a system. Keep a safe and prudent distance away from the meter during system start-up.
- Meters used in oil & gas or flammable service require a ground wire connection to arrest any static electricity discharge.

4.3 Unpacking

McCrometer tests and inspects all products during manufacture and before shipment. However, inspect the meter and accessories at the time of unpacking to detect any damage that might have occurred during shipment. If there is a question regarding the paperwork or the flowmeter, please contact your McCrometer representative.

4.4 Orientation

A flow label is placed on each V-Cone to show the direction of flow through the meter. For most line sizes, the centerline of the pressure sensing taps are located 2.12" apart. The high pressure tap is upstream. The low pressure tap is downstream. (See Figure 12.) This information is necessary when connecting the differential pressure measuring device.

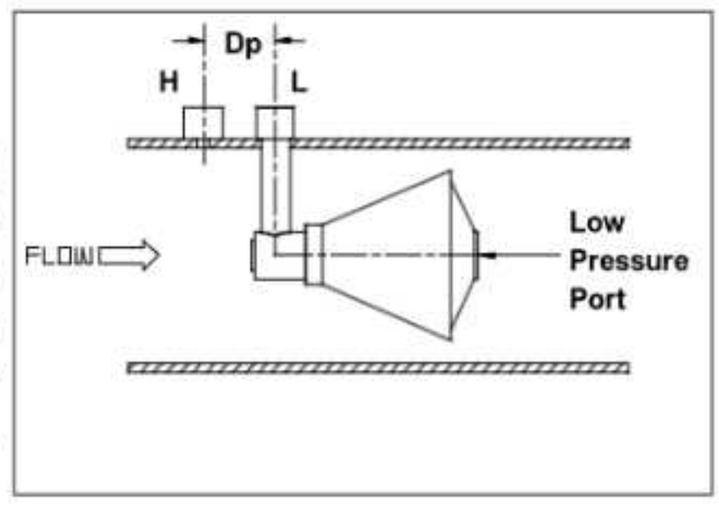

Figure 12. High and Low Ports

4.5 Piping Specification

The pipe, tubing, or manifold installed between the primary and secondary elements must comply with national and local standards, regulations, and codes of practice. A process piping specification will include the specification for the isolation valve (or block valve) closest to the primary element. The specification for the piping or tubing between this isolation valve and the secondary device, including any additional valves, may differ from the piping specification for the root (primary) isolation valves. The smaller size and lower temperatures in the impulse lines often justify these differences.

An approved hydrostatic test or pneumatic test may be required for piping systems to prove the integrity of the pressure containing parts of the system.

The break (change) in piping specification between the process (primary) and the instrument (secondary) side is normally at the process isolation valve (root valve) at its secondary connection end. If flanged, then the specification break will occur at the mating face of the secondary side flange.

4.6 Piping Requirements

The recommended straight, unobstructed pipe run upstream of a V-Cone is zero to three diameters. The recommended run downstream of a V-Cone is zero to one diameter. "Diameter" here refers to the nominal pipe size of the pipe run.

McCrometer, along with several independent testing facilities, has tested the V-Cone in several common piping configurations. These tests have proven the V-Cone to be within accuracy specifications even when close coupled with single 90° elbows or double 90° elbows out-of-plane. The V-Cone can also be used in lines slightly larger than the meter tube.

In applications where the meter tube is larger than the adjacent line, such as with cement lined piping, the user should consult the factory for additional installation requirements.

4.7 Isolation (Block) Valves

To provide best maintenance access of the impulse piping and secondary elements, it is recommended that root block valves be installed immediately adjacent to the pressure taps of the V-Cone. If liquid could fill the impulse lines, the root block valves should be arranged so as not to impede fluid movement and proper settling and it may be necessary to install these valves on sloping lines. When specifying root isolation valves, practical considerations include:

a. The valve must be rated for the pipe operating pressure

b. There must be a careful choice of both valve and packing, particularly in the case of dangerous or corrosive fluids, and with gases such as oxygen

c. Valves must be chosen that do not affect the transmission of a pressure signal, particularly when that signal is subject to any degree of fluctuation.

Ball valves and gate valves are recommended for this application. Globe style block valves are **not** recommended for DP transmission lines.

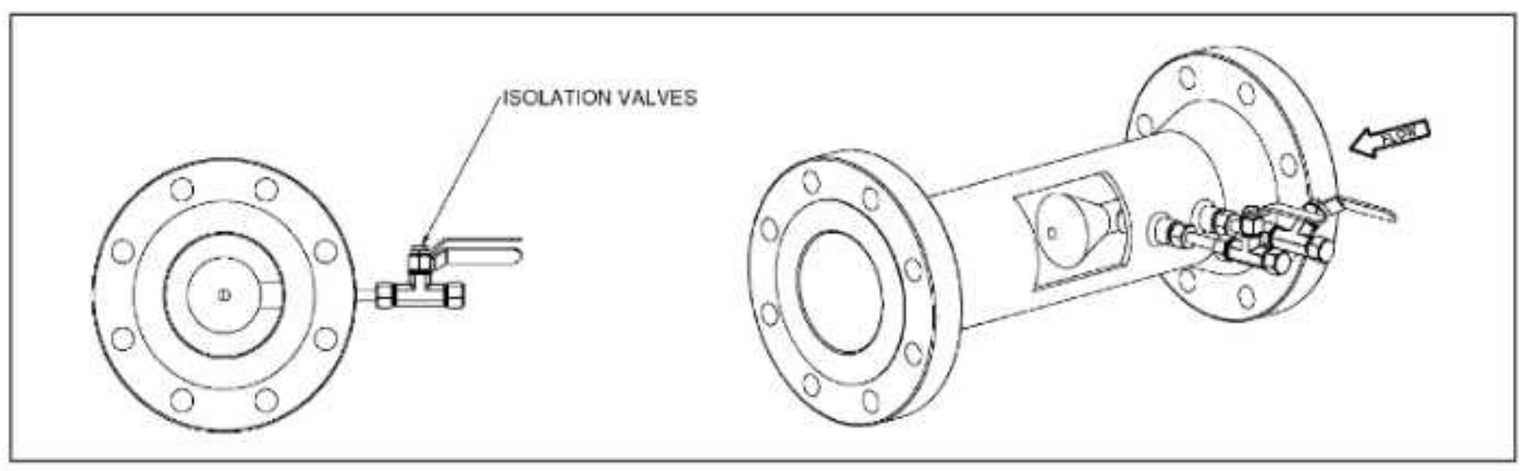

Figure 13. Isolation (Block) Valves

4.8 Valve Manifolds

Valve manifolds are often installed to permit operating, calibrating and troubleshooting the secondary device, without removing it. A typical valve manifold configuration is shown in Figure 14.

These manifolds are used:

a. To isolate the secondary device from the impulse lines

b. To open a path (bypass) between the high and low pressure sides of the secondary device. The secondary device zero (no flow signal) can be adjusted at operating pressure with one block valve closed and the bypass valve(s) open.

c. To drain or vent the secondary device and/or the impulse piping to atmosphere.

d. A 5 way manifold can be used to provide connection of the secondary device to a "dead weight" or other reference calibrator to enable "in situ" calibration of the differential pressure device.

Manufactured valve manifolds may reduce cost and save space by integrating the required valves and connections into one assembly. Valve manifolds must be installed in the orientation specified by the manufacturer to avoid possible errors caused by trapped pockets of gas or liquid in the body.

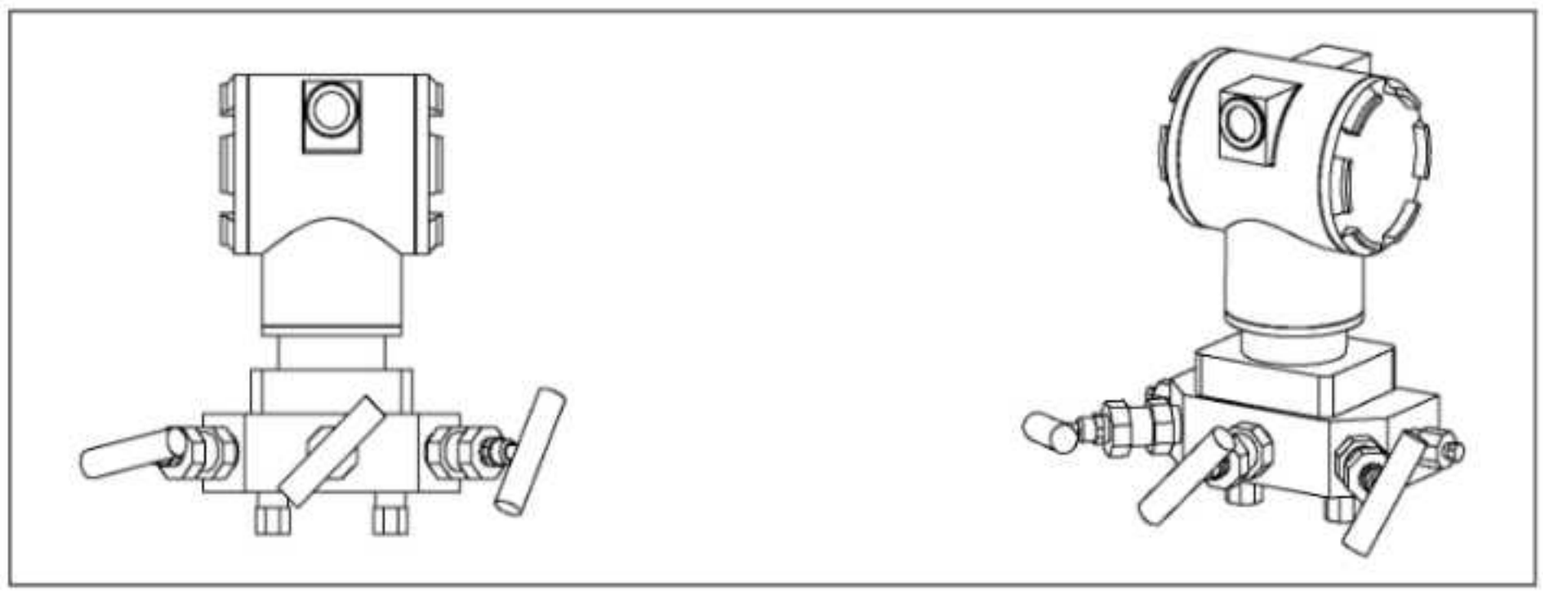

Figure 14. A 3-way Manifold Block mounted with a DP Transducer

4.9 Installation

The preferred design will minimize the distance between the primary and secondary devices, while still providing the necessary cooling for the protection of the secondary device in applications, such as steam. The connecting piping is commonly referred to as "impulse lines", "sensing lines", "gauge lines", "instrument tubing", "instrument piping", or "DP piping".

The complete design for the installation of the flow meter including the secondary elements should consider instrument troubleshooting and calibration. Access to the impulse lines, the valves, the valve manifold, and the secondary device will be required. Installations providing this access must not compromise the measurement accuracy by adding excessively long impulse lines and numerous fittings.

NOTE: Impulse piping should be kept as short as possible for accurate measurement. Longer and more complex piping may increase uncertainties and provide more opportunities for plugging. Plugged lines lead to loss of control and may create hazardous situations. Good design practice will allow for natural draining of liquids and venting of gases from the impulse lines.

Note: As a general rule liquids fall and gases rise and this determines the orientation of pipework.

Any difference in elevation between the primary device pressure taps and the secondary device will result in a pressure difference between the two ends of the impulse lines due to the hydrostatic pressure of the liquid column in the impulse lines. The impulse lines shall be installed in such a way that the hydrostatic pressure in the two impulse lines is identical. If the fluids in the two lines are not identical in density, a difference in pressure is generated. Density differences will arise if there is a temperature difference between the fluids in the two impulse lines. It is recommended that, if possible, the two impulse lines are fastened together, and if insulated, they are insulated together. Non-identical fluids in the two impulse lines can also give rise to density differences and should be avoided.

4.10 Pressure Taps

The pressure tap is part of the primary device. The line pressure, required for the calculation of flow rate, is measured from the upstream pressure tap.

4.11 Remote Seals or Chemical Seals

In very dirty services, pre-filled physical barrier diaphragm seals, called remote seals or chemical seals, can be used. Deflection of the diaphragm requires some additional force that must be considered in the calibration process. For most DP meters, diaphragms add significant uncertainty to the meter reading.

Errors are reduced with larger diaphragms and good design. To ensure measurement sensitivity, diaphragms are typically 3″ or 4″ (80 or 100 mm) in diameter. It is recommended that the impulse lines or capillary tubes to remote seals be of identical length and be arranged to reduce exposure to different temperatures

4.12 Impulse Line: General

The required diameter of impulse lines depends on service conditions. The bore should not be smaller than ¼″ (6 mm) and should preferably be at least 3/8″ (10 mm). The internal diameter shall preferably not exceed 1″ (25 mm). For steam applications 3/8″ (10mm) to 1″ (25mm) should be used. Most instrument tubing is 316 SS but for offshore applications Duplex Steel may well be the preferred material to avoid salt spray corrosion of the piping.

Note: In all cases, chemical compatibility with the environment and process medium is paramount.

4.13 Impulse Line: Process Industries

In most process control applications, the primary concern is reliability. If the pressure taps or the impulse lines plug, then the DP signal is lost. This may result in a dangerous or expensive loss of control. High reliability is required for flow signals used in process safety management. A minimum I.D. of 5/8″ (16 mm) is recommended in industrial applications. Some users even specify ¾″ (18 mm) as the minimum I.D. For high temperatures in condensing vapor service, 1″ (25 mm) is specified to allow for unimpeded flow of condensate. In small piping and with clean fluids, appropriate smaller sizes may be used. In all configurations, it is recommended that stainless steel impulse lines are used.

4.14 Impulse Line: Steam Applications

Steam temperatures could be as high as 1500° F (815 °C), which is much higher than can be tolerated by a standard DP transmitter. The standard differential pressure transducer can only tolerate a temperature of approximately 200° F (93 °C). To isolate the transducer from the very high temperatures the common techniques are to install a condensate pot in the line or to have a sufficiently long DP leg to allow for sensing leg cooling prior to the transmitter. In all configurations, it is recommended that stainless steel impulse lines are used.

To ensure that the DP transmitter is not exposed to excessive temperatures the impulse line length needs to have a length such that the temperature is below 200° F (93° C) at the transducer. A guideline to achieve that is to work on the basis of a temperature drop of 100° F (38° C) per foot (305mm) of impulse piping. However, the operator must ensure that for the particular local set of conditions the required temperature at the transmitter is achieved.

4.15 Insulation

Some hot or very cold lines require thermal insulation for personnel protection. It may also be necessary to insulate and "heat trace" the impulse lines to avoid freezing or unintended condensation. The amount of heat used must avoid the undesired vaporizing of liquids in liquid filled lines, or the prevention of condensation with condensable vapors. Bundling the impulse lines together so that the impulse lines will be at approximately the same temperature is preferred. Having the DP transmitter in a temperature controlled Instrument Housing is good practice for accurate metering in an environment exposed to large temperature variations such as an offshore platform or a desert site.

4.16 Horizontal Piping Installations: Condensing Vapors

This is the most difficult application for DP piping and requires careful consideration during installation. Steam can be at a very high temperature which can damage the transmitter; in addition, it can be in the liquid or gaseous phase depending on temperature and pressure. As such, the DP pipework must be oriented in such a manner that it can operate with a gas or liquid present.

The pressure taps shall be on the horizontal centerline (3 o'clock or 9 o'clock) of the primary device. In condensing hot vapor service, such as steam, the fluid in the impulse lines is liquid condensed from the vapor. In this case the pressure taps should be horizontal with the impulse lines oriented to the DP transmitter, in accordance with Figure 15.

There is a concern that at start-up the secondary device could become exposed to the vapor temperature before the lines fill with condensed liquid and cool. In this case it is prudent to have a plugged Tee fitting in the impulse line to enable the impulse line and secondary device to be filled with liquid (water for steam service) prior to start up (see Figure 15).

Cryogenic (very low temperature) systems may require special designs not considered here. The liquids in the lines will isolate the secondary device from the temperatures of the primary flowing fluid. The temperature difference may be considerable over a short distance of 100 mm (4") to 200 mm (8").

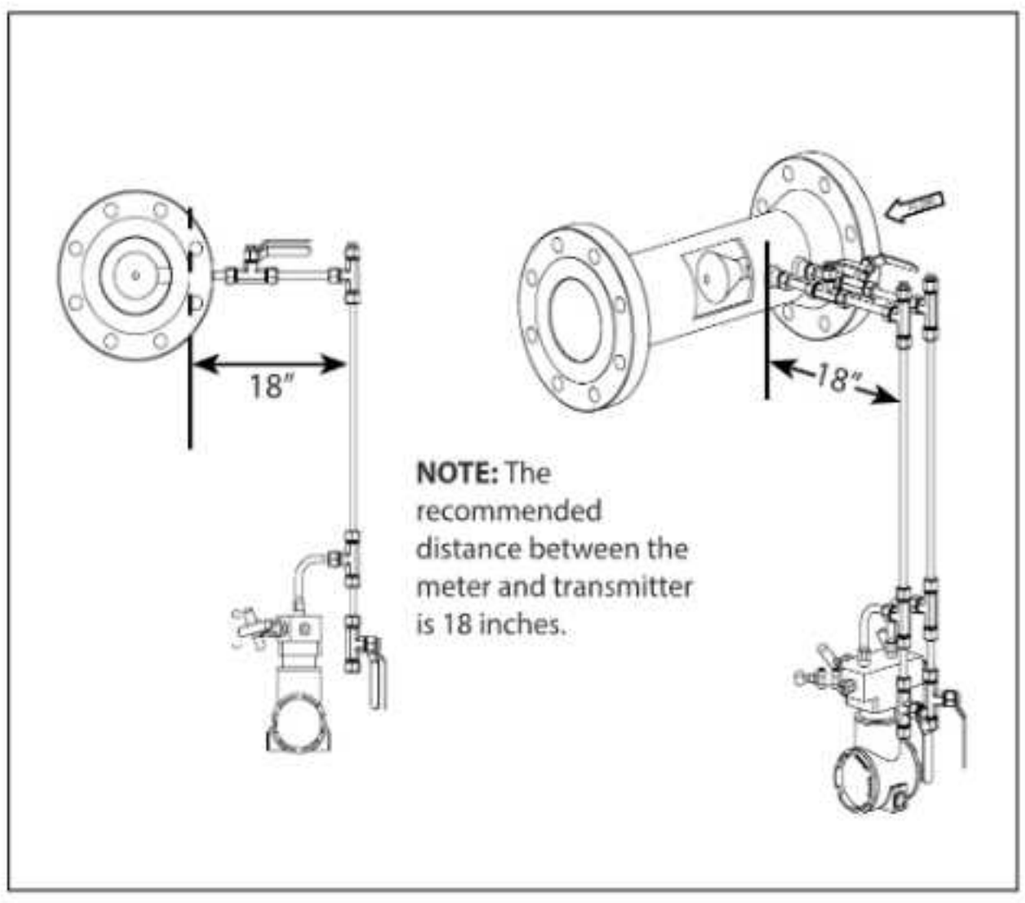

Figure 15. Horizontal Piping Installation for Condensing Vapor Application (e.g. Steam)

4.17 Vertical Piping Installations: Condensing vapors, i.e. steam

With condensing vapors, using wall taps is strongly recommended. This prevents condensate from building up in the cone or evaporating and changing the DP. The impulse lines are taken out horizontally to a "T". This distance should be a minimum of 18" for saturated steam; and for superheated steam it should be long enough to reduce the temperature to below the saturation temperature. The "T" enables a plug to be installed at the top for liquid filling purposes to avoid overheating of the DP cell. The manifold block will be placed directly below at a distance compatible with maintaining the DP transmitter at a safe operating temperature.

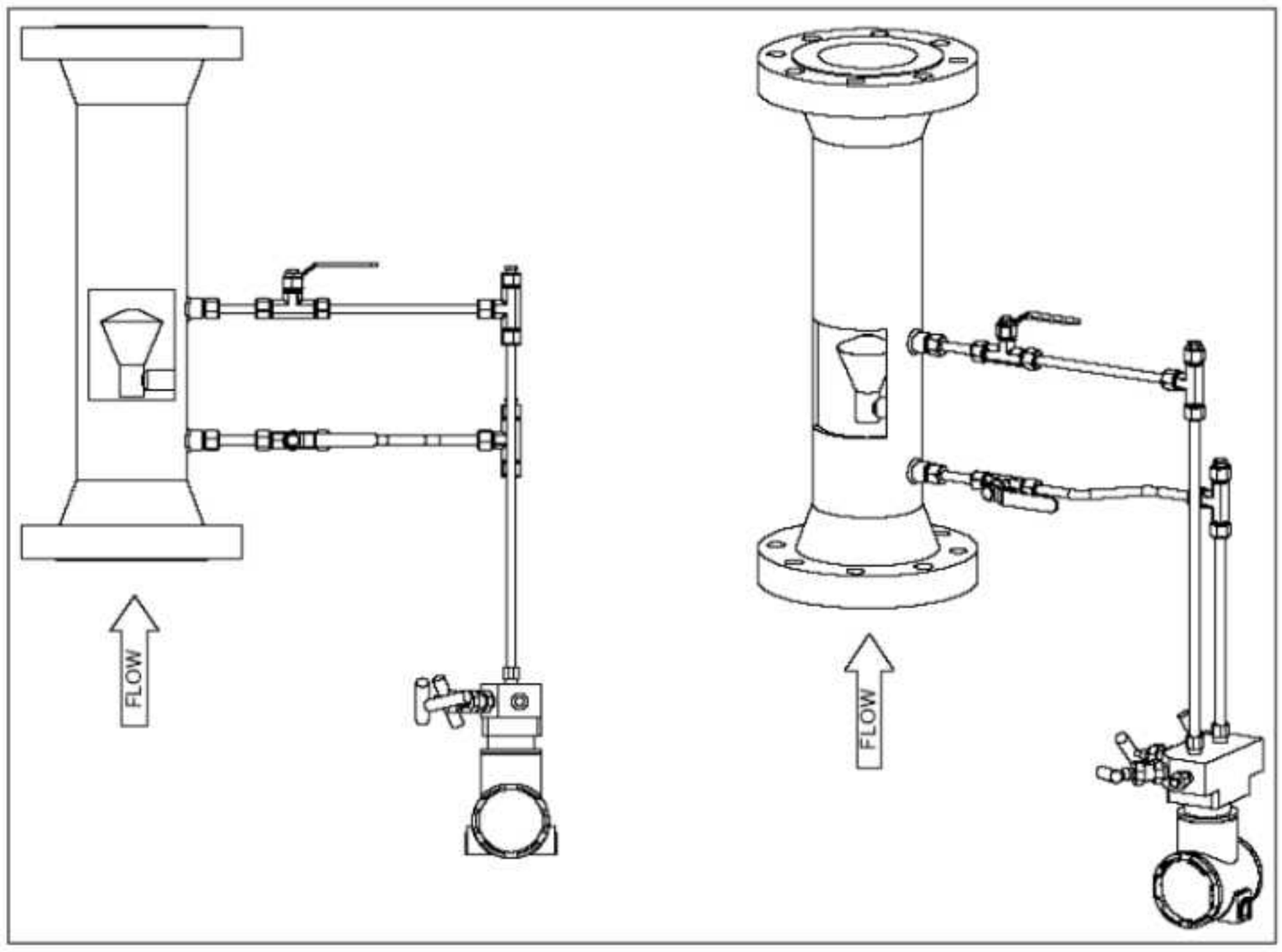

Figure 16. Vertical Up Flow Piping Installation for Condensing Vapor Application (e.g. steam)

4.18 Calibration Compensated Installation

The two impulse lines leave the pipe horizontally and then turn down to the secondary device. The zero of the secondary device must be adjusted to account for the difference in heights of the two impulse lines and the contained liquid. The vertical legs should be filled manually and completely. Do not let the process fill these legs.

4.19 Vertical Down Flow Piping Installations: Condensing Vapors, i.e. Steam

The upper impulse line is taken out horizontally to a "T" piece. The "T" piece enables a plug to be installed at the top for liquid filling purposes to avoid overheating of the DP Cell. The temperature at the "T" piece should be below the saturation point. The manifold block will be placed directly below at a distance compatible with maintaining the DP transmitter at a safe operating temperature.

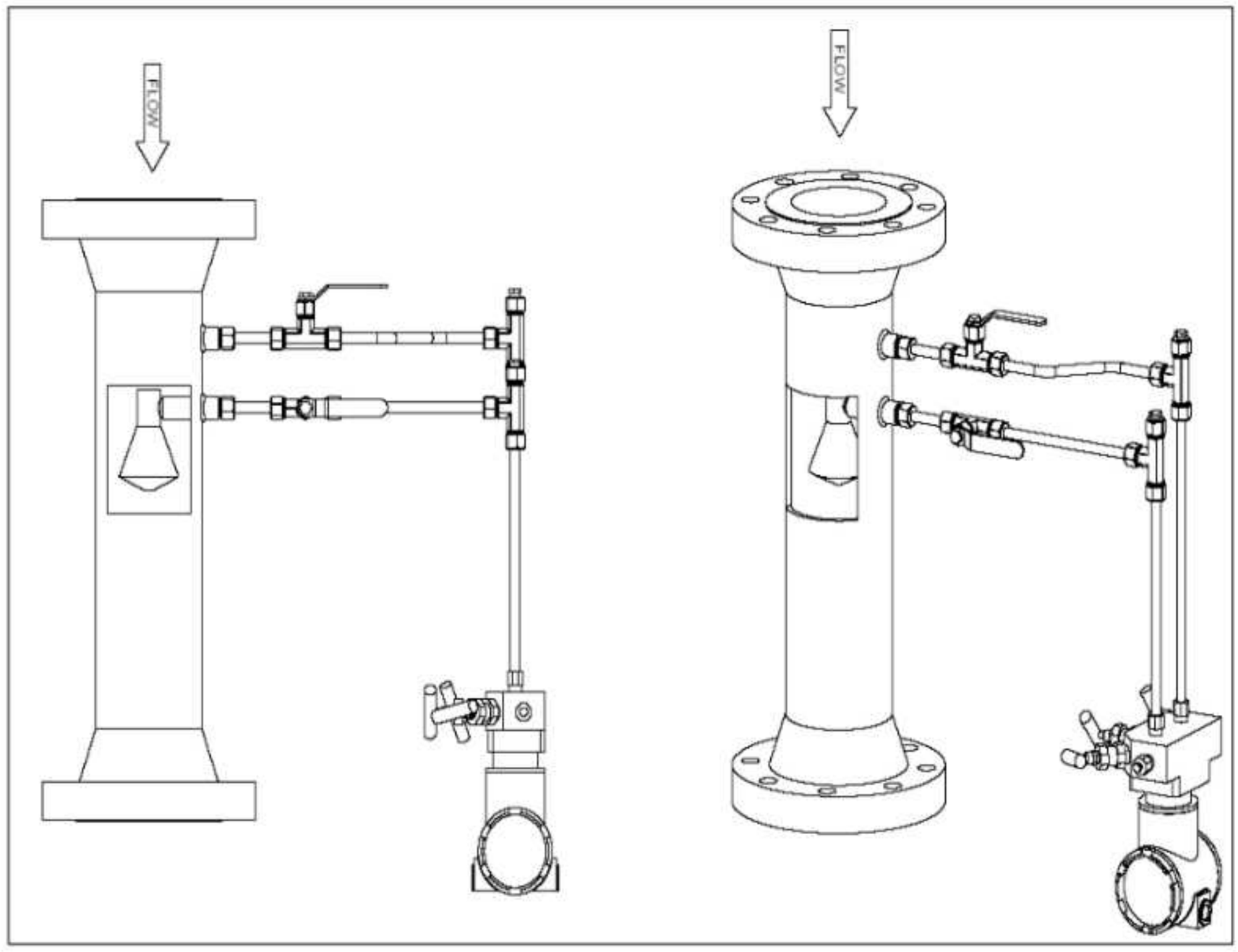

Figure 17. Vertical Down Flow Piping Installation for Condensing Vapor Application (e.g. Steam)

4.20 Supporting Manifold Blocks and Dual Transmitters

When flow turndowns exceed 10:1, two transmitters of different ranges would be required to obtain a very accurate measurement. The drawing below illustrates how this would be done where the DP piping comes from above. The complete unit could be inverted for installations where the Transmitter would be mounted above the V-Cone meter. Each transmitter should be supported. A common practice is to secure the transmitters to a 2" (50mm) pipe via mounting brackets.

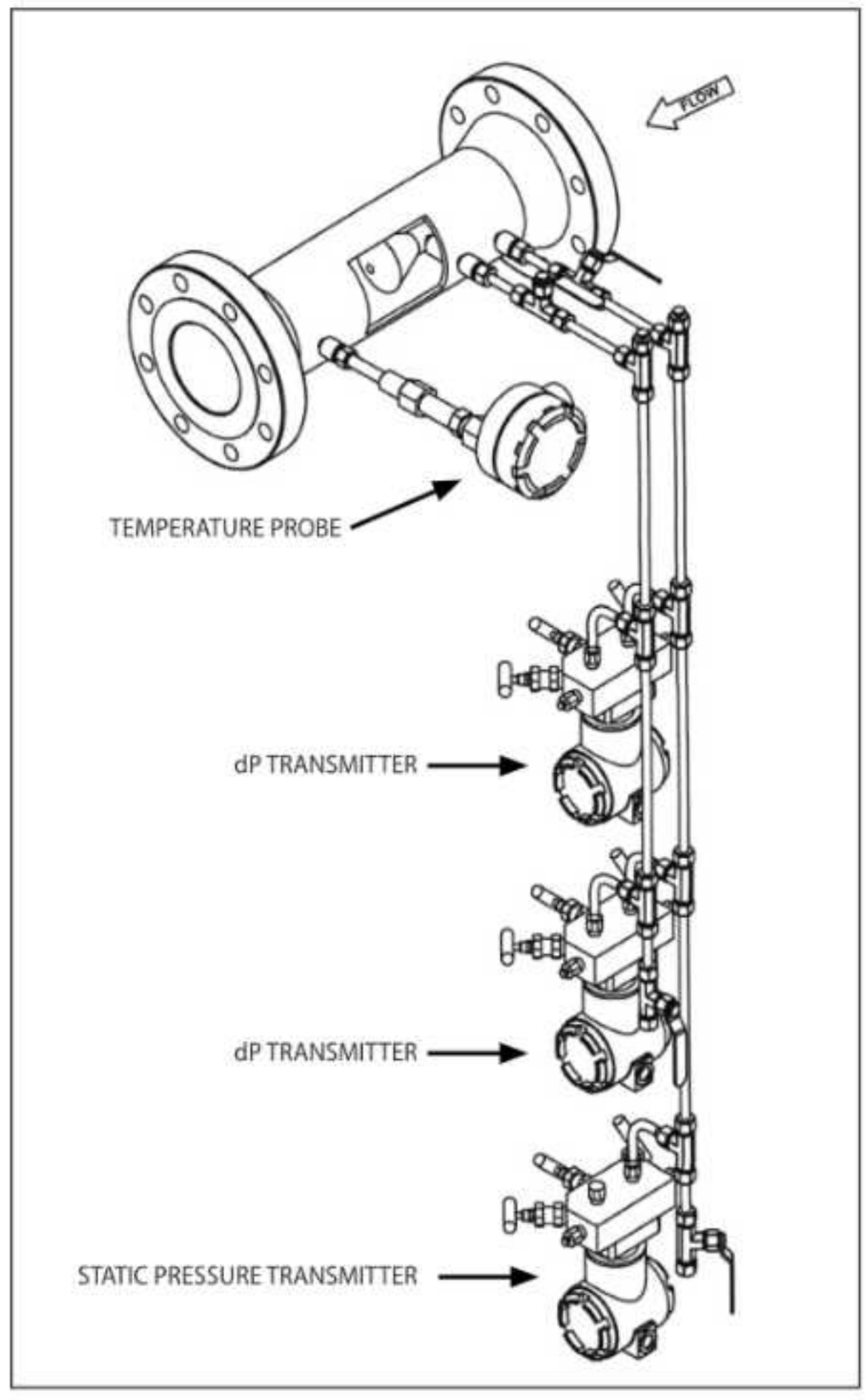

Figure 18. Dual DP Transmitters Mounting Technique

4.21 Zeroing DP Pressure Transmitters Following Installation For Steam Flow Applications

1. Close the high and low pressure V-Cone shut-off valves (V1 & V2)
2. Remove vent plugs P1 and P2.
3. Fill impulse lines with clean water/glycol solution by pouring through P1 & P2.
4. With impulse lines filled, adjust transmitter gauge pressure to read zero.
5. Adjust transmitter DP to zero.
6. Replace and tighten vent plugs P1 and P2 and slowly open high and low pressure V-Cone shut-off valves V1 and V2.
7. Allow time for excess impulse liquid to drain back into V-Cone and for the system to stabilize. This may take several minutes. Verify that there are no leaks in the impulse line components and connections.

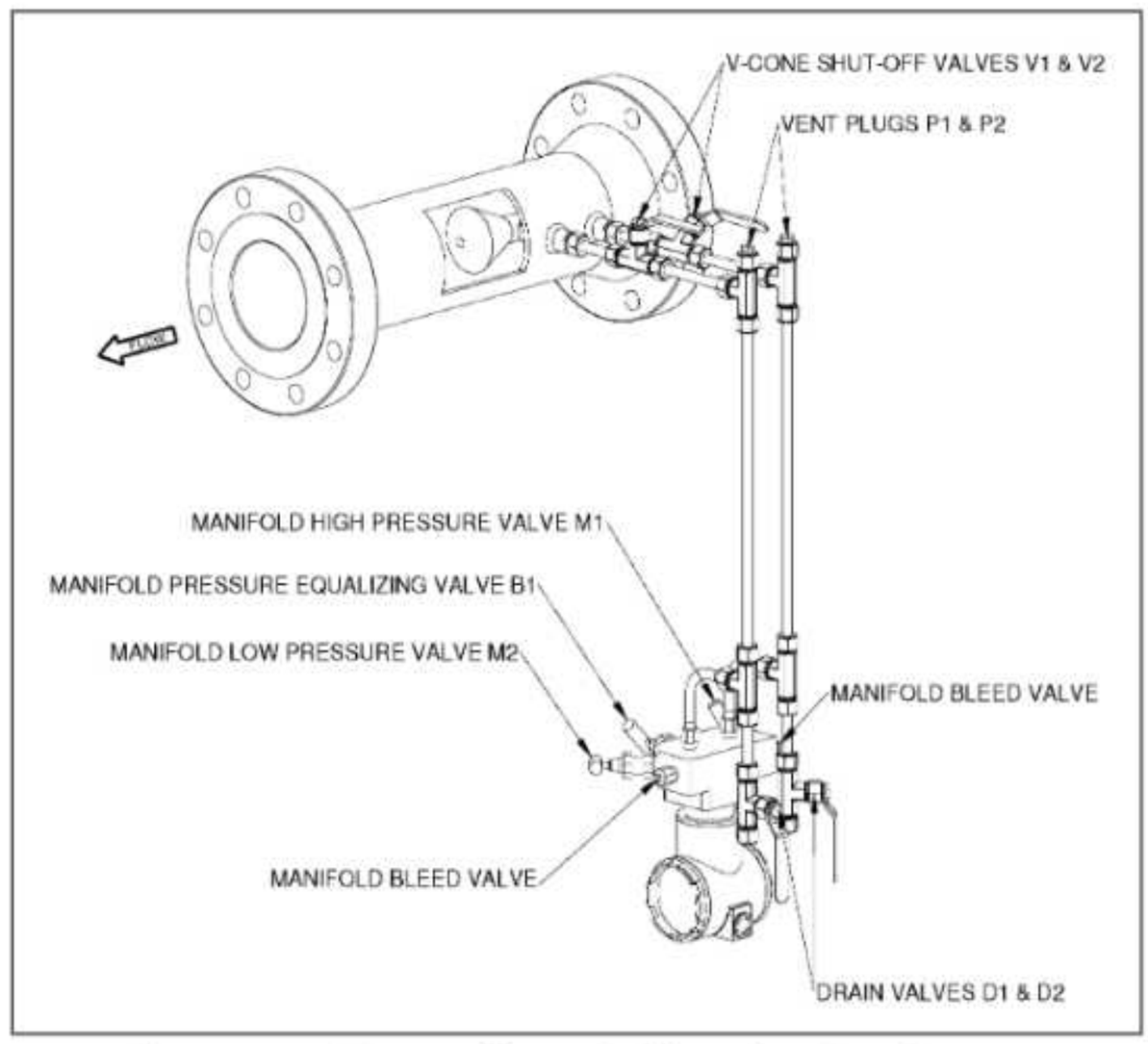

Figure 19. Transmitter Calibration For Steam Application

4.22 Zeroing Low Range Transmitters

When zeroing low range transmitters (example 25"), you may need to zero more than the transmitter will allow. Some transmitters will not let you zero more than 10% of full scale. With vertical steam meters you may have to zero 8" to 15". If you can't zero, you must re-range your transmitter. Example: The required span is 0 to 17". With the cold legs full and open to atmosphere, your transmitters shows a negative DP (-10").

- Span the transmitter with 4 mA equal to the value above (-10").
- Span the transmitter with 20mA equal to the original span 17" less the negative offset (example: 17" -10 = +7")
- This will give you a 4 to 20mA signal equal to 0 to 17".

4.23 Differential Pressure Measurement

With current technology the differential pressure is normally measured with a differential pressure transmitter. These transmitters may simply record the differential pressure and provide a 4-20mA signal to a flow computer or to DCS system.

McCrometer does not show any preference to the differential pressure transducer manufacturer. However, McCrometer has worked with the transducer suppliers which produce intelligent devices which require the V-Cone algorithms to generate a flow rate rather than a differential pressure output. Such cooperation has taken place with Foxboro and Rosemount.

Note: It is absolutely essential that the DP transducer is ranged for the specific V-Cone meter. Each meter will produce a range of differential pressure and the transducer must cover that range e.g. a V-cone with a max. flow producing 230 inch water column would use a 250 inch or 300 inch DP transducer and would be spanned for 230 inches. The DP transducer must also be selected for the operating pressure and temperature of the metering application. It is also necessary that the DP transducer will cover the lower range of the DP produced accurately. DP transducers are notoriously inaccurate at the bottom end of the range. For flow ranges over 10:1, stacking transmitters is recommended. Stacking transmitters is a system with two transmitters where one measures the low DPs and the other measures the high DPs.

4.24 Temperature And Pressure Measurement

In the flow measurement calculation for all DP devices it is necessary to include the temperature and pressure measured upstream of the meter. For accurate temperature measurement for orifice metering, (which are very susceptible to upstream disturbances from items such as thermo wells), it has been necessary to install the thermo well downstream and make a correction to the upstream condition. In the case of V-Cone meters, which are always calibrated and have very little influence by upstream disturbances, the thermo well can be located upstream of the cone and the meter calibrated with the thermo well in position. Not all users measure the temperature via a thermo well, and for stable temperature conditions there has been an increasing tendency to install a thermocouple or temperature probe on the outside of the upstream piping and cover it with insulation.

5.0 Dimensions

5.1 Face To Face Dimensions

Please reference the V-Cone configuration sheets for more complete technical data.

Size	Beveled Threaded Plain		ANSI 150,300 Slip On	
inch	inch	mm	inch	mm
½	7.75	197	8	203
¾	7.75	197	8	203
1	7.75	197	8	203
1½	9.75	248	10	254
2	11.63	295	12	305
2½	11.50	292	12	305
3	13.50	343	14	356
4	15.50	394	16	406
5	21.50	546	22	559
6	21.50	546	22	559
8	25.25	641	26	660
10	27.25	692	28	711
12	29.25	743	30	762
14	29	737	30	762
16	29	737	30	762
18	31	787	32	813
20	35	889	36	914
24	47	1194	48	1219

6.0 Model Selections

6.1 Precision Tube V-Cone Model Template

Examples:

Model	Description
VS06QE04N	V-Cone 6" S304 S40 W/ ANSI CL 300 Flanges
VB24SD00N	V-Cone 24" Coated Carbon Steel w/ Beveled Ends

Materials continued on next page.

6.1.1 North American Region

Primary Element

Steam Designation
EVS

Line Size
02*
04*
06
08
10
12
14
16
18
20
24

Materials	
Code	Description
F	Carbon Steel Body, 316/L Cone, A105 Carbon Steel Flange and Coupling
A	All S316/L

*Carbon steel construction not recommended for line sizes less than 6".

Schedule	
Code	Description
D	STD
E	S40
F	S80

Flange & Class	
Code	Description
01	Beveled
03	ANSI 150#
04	ANSI 300#

Process Connection	
Code	Description
N	Traditional Mount (1/2" NPT 3000#)
W	Universal Mount for Vertical Flow

Notes:

- RTD orientation is viewed from upstream.
- Standard RTD location (90° clockwise from HP tap viewed upstream)
- Steam package includes 3-valve traditional manifold.

Electronics

-

Make	
Code	Description
F	Fuji Electric DP Transmitter
N	No Transmitter

DP Range	
Code	Description
1	Standard DP Range
2	Low DP Range
3	High DP Range
4	Very High DP range
0	None

LCD Display	
Code	Description
N	No LCD
Y	LCD

Communication Protocol	
Code	Description
1	HART
0	None

Output*	
Code	Description
V	Mass Flow Rate
N	None

* Standard output

Flow Computer*	
Code	Description
1	Panel Mount
2	NEMA 4X
0	No Flow Computer

Manufacturer - DP Range	
Fuji Electric	1 - 0 to 10 mbar
	2 - 0 to 60 mbar
	3 - 0 to 320 mbar
	4 - 0 to 1300 mbar
	0 - None

Options

-

Accreditation Options	
Code	Description
P	PP

RTD Positioning Options	
Code	Description
-	90° (6 o'clock)
A	180° (9 o'clock)
B	270° (12 o'clock)
C	No RTD or thermowell

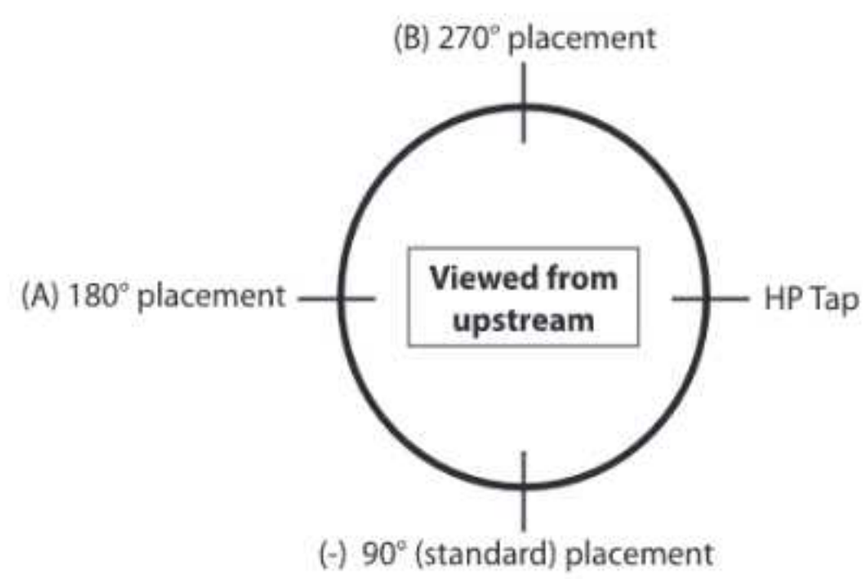

6.1.2 Latin American Region

Primary Element

Steam Designation
EVS

Line Size
02*
04*
06
08
10
12
14
16
18
20
24

Materials	
Code	Description
F	Carbon Steel Body, 316/L Cone, A105 Carbon Steel Flange and Coupling
A	All S316/L

*Carbon steel construction not recommended for line sizes less than 6".

Schedule	
Code	Description
D	STD
E	S40
F	S80

Flange & Class	
Code	Description
11	Beveled
13	ANSI 150#
14	ANSI 300#

Process Connection	
Code	Description
N	Traditional Mount (1/2" NPT 3000#)
W	Universal Mount for Vertical Flow

Notes:

- RTD orientation is viewed from upstream.
- Standard RTD location (90° clockwise from HP tap viewed upstream)
- Steam package includes 3-valve traditional manifold.

Electronics

-

Make	
Code	Description
F	Fuji Electric DP Transmitter
N	No Transmitter

DP Range	
Code	Description
1	Standard DP Range
2	Low DP Range
3	High DP Range
4	Very High DP range
0	None

LCD Display	
Code	Description
N	No LCD
Y	LCD

Communication Protocol	
Code	Description
1	HART
0	None

Output*	
Code	Description
V	Mass Flow Rate
N	None

Flow Computer*	
Code	Description
1	Panel Mount
2	NEMA 4X
0	No Flow Computer

* Standard output

Manufacturer - DP Range	
Fuji Electric	1 - 0 to 10 mbar
	2 - 0 to 60 mbar
	3 - 0 to 320 mbar
	4 - 0 to 1300 mbar
	0 - None

Options

-

Accreditation Options	
Code	Description
P	PP

RTD Positioning Options	
Code	Description
-	90° (6 o'clock)
A	180° (9 o'clock)
B	270° (12 o'clock)
C	No RTD or thermowell

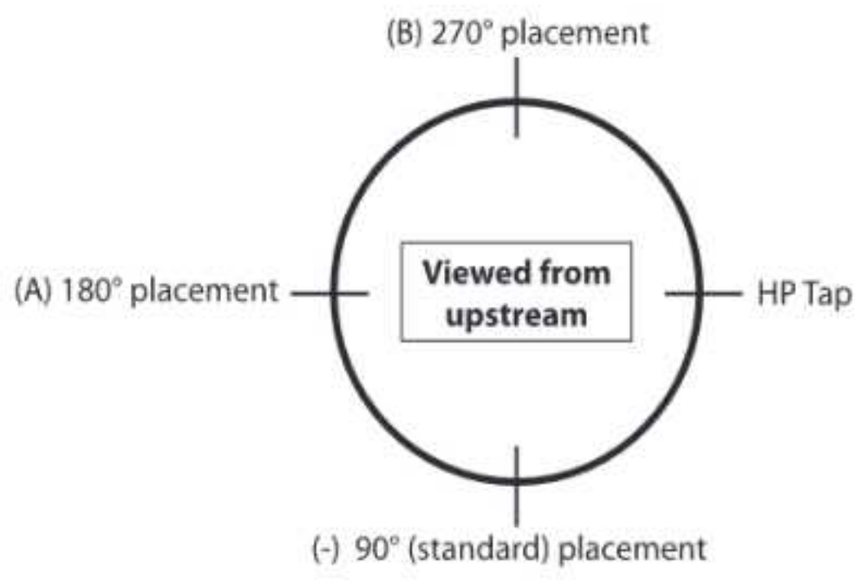

6.1.3 European Region

Primary Element

Steam Designation
EVS

Line Size	
Code	Description (in / mm)
02*	2 / 50
04*	4 / 100
06	6 / 150
08	8 / 200
10	10 / 250
12	12 / 300

Materials		
Code	Description	
A	All S316/L	
G	Body:	A333 Gr. 6 Low Temp Carbon Steel
	Cone:	S316/L
	Coupling:	A350LF2 CL1 Low Temp Carbon Steel
	Flange:	P250GH

*Carbon steel construction not recommended for line sizes less than 6". All line sizes are schedule standard.

Schedule	
Code	Description
D	Standard

Class	
Code	Description
21	Beveled
23	DIN PN16 Weld Neck
24	DIN PN40 Weld Neck

Process Connection	
Code	Description
N	Traditional Mount (1/2" NPT 3000#)
W	Universal Mount for Vertical Flow

Notes:

- RTD orientation is viewed from upstream.
- Standard RTD location (90° clockwise from HP tap viewed upstream).
- Steam package includes 3-valve traditional manifold.

Electronics

-

Make	
Code	Description
F	Fuji Electric DP Transmitter
N	No Transmitter

DP Range	
Code	Description
1	Standard DP Range
2	Low DP Range
3	High DP Range
4	Very High DP range
0	None

LCD Display	
Code	Description
N	No LCD
Y	LCD

Communication Protocol	
Code	Description
1	HART
0	None

Output*	
Code	Description
V	Mass Flow Rate
N	None

Flow Computer*	
Code	Description
1	Panel Mount
2	NEMA 4X
0	No Flow Computer

* Standard output

Manufacturer - DP Range	
Fuji Electric	1 - 0 to 10 mbar
	2 - 0 to 60 mbar
	3 - 0 to 320 mbar
	4 - 0 to 1300 mbar
	0 - None

Options

-

RTD Positioning Options	
Code	Description
-	90° (6 o'clock)
A	180° (9 o'clock)
B	270° (12 o'clock)
C	No RTD or thermowell

Required

-

Accreditation Included
PED

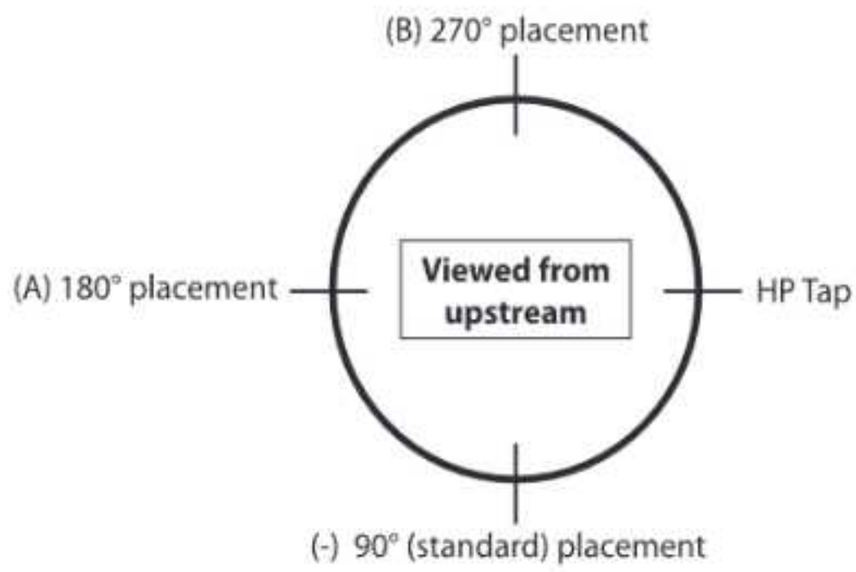

6.2 V-Cone Materials

Construction materials can include the following:

Option 1:
Body: Carbon steel
Cone: 316/L stainless steel
Flange & coupling: A105 carbon steel

Option 2:
All 316/L stainless steel

7.0 Maintenance

7.1 Periodic Maintenance

If the meter is installed correctly, there should be no reason for periodic maintenance or re-calibration. In extreme process conditions, periodically inspect the V-Cone for any significant physical damage. Calibrate and maintain secondary and tertiary instrumentation according to the manufacturer's instructions.

8.0 Trouble-shooting

8.1 Troubleshooting a V-Cone System On-Site

This guide is intended to help you troubleshoot a V-Cone system. Keep several points in mind as you proceed:

1. Most V-Cones are calibrated devices. The meter has already had flow through it. If a cone is missing or a leak exists inside the meter, this would be discovered during the calibration.
2. A flow measurement requires a system. Do not assume a problem exists with the primary element just because it is called a *V-Cone* system. Most problems occur in the DP transmitter or the flow computer.
3. This guide assumes a simple system of meter, manifold, DP transmitter, and flow computer. Systems can be much more complex with pressure and temperature transmitters, as well as full scale digital control systems. Do not limit your evaluation to just these suggestions.
4. If you discover a problem / solution not listed in this guide, please contact a V-Cone Application Engineer at McCrometer: 1-951-652-6811.

This guide separates the flow measurement system into areas. These areas are labeled in the diagram below:

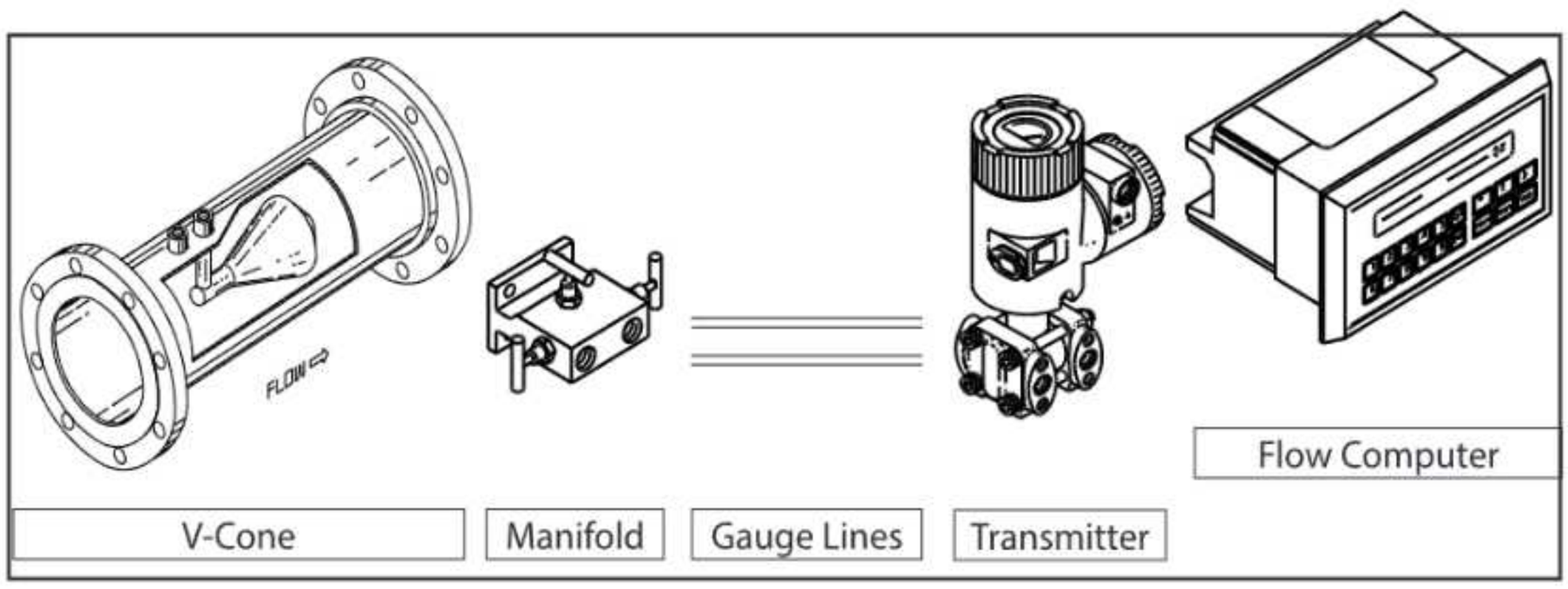

Figure 20. System areas

During troubleshooting, make a preliminary assessment of the symptoms of the problem and consult the following chart :

SYMPTOM	AREA	POSSIBLE PROBLEM / SOLUTION
No signal (0 mA)	Transmitter	No power to transmitter.
	Transmitter	Transmitter not wired correctly. Perform continuity check on wiring.
Negative signal (< 0 mA)	Transmitter	Transmitter wires are reversed.
Low signal (<4 mA)	V-Cone	V-Cone installed backwards, with gauge lines attached as marked. In this case, the high pressure tap would be sensing a lower pressure than the low pressure tap. This negative DP would force the signal below 4 mA.
	Gauge lines	Gauge lines are reversed. Transmitter sees more pressure on low side than high side. Check "H" and "L" marks on V-Cone and transmitter.
	Transmitter	Transmitter is malfunctioning. Some transmitters will send a specified mA signal when a malfunction occurs. This can be set to low values, such as 3.8 mA, or high values, such as 20.1 mA.
Zero signal (4 mA)	V-Cone	Meter has been damaged. Remove meter and visually inspect.
	V-Cone	No flow in pipeline. Check other system locations to verify flow through the meter. The meter could be under pressure but still have no flow.
	Manifold	Manifold / gauge lines closed or blocked. Ensure valves and lines are open. If fluid is safe, open vent valves on transmitter to verify pressure in the gauge lines.
Zero signal (4 mA)	Transmitter	Transmitter is in check mode. Some transmitters allow for system checks by forcing the signal to 4 or 20 mA. Vent low side of transmitter to ensure the signal responds to pressure changes.
Wrong signal – high or low	V-Cone	Process conditions do not match actual conditions. Contact McCrometer or your sales representative to recalculate using the correct process conditions.
	V-Cone	Wrong meter. Verify serial numbers on meters to ensure correct specifications. Sometimes two meters are interchanged. Remember each V-Cone has a unique flow coefficient.
	Gauge lines	Foreign material trapped in gauge lines. Dirt and sediment can settle into the gauge lines. If the fluid is safe, vent the gauge lines and inspect for spurts of solids, gasses, or liquids (whichever should not be there). If the fluid is not safe, open the center manifold valve for several minutes under high DP. Close the valve and compare the signal level to before. In a horizontal, liquid application, install the meter with the taps on the sides of the pipe (3 or 9 o'clock) For a horizontal, gas application, install at top or sides of the pipe (12, 3, or 9 o'clock).
	Flow computer	Flow calculations are in error. Use loop calibrator and apply 4, 12, and 20 mA to computer / system. Each of these points should correlate with the V-Cone sizing information.
	Flow computer	mA signal is read incorrectly. Apply a known current to the loop and read the raw signal in the computer. Most computers allow the user to see the mA signal directly.
Signal too high	Transmitter	DP span is set too low. Use pressure calibrator or handheld communicator to verify span point.
	Transmitter / flow computer	Both the transmitter and flow computer are set to take the square root of the signal. The signal will be correct at 20 mA. The positive error will increase dramatically as the signal decreases from 20 mA. Use a loop calibrator to check 12 mA point.
	Flow computer	4 mA set to minimum flow. Our calculations assume that 4 mA will be equal to zero flow. Sometimes 4 mA is set to equal the minimum flow on the sizing page. This error will be zero at maximum flow and increase as the flow decreases. The amount of error will depend on the zero offset.

SYMPTOM	AREA	POSSIBLE PROBLEM / SOLUTION
Signal too high	V-Cone	V-Cone is installed backwards. Look for a flow direction arrow on the meter body, near the pressure taps. If no arrow is visible and the meter is large than 2 inches, the flow direction can be determined by the location of the pressure taps. The pressure taps will be closer to the upstream side. On meters less than 2 inches, the gauge lines will need to be removed. Look at the base of both pressure taps. One tap will be smooth at the base, the other will be mostly weld material. The smooth tap is on the upstream side. With a meter measuring backward flow, the DP signal will be approximately 30% too high.
	V-Cone	Flow is going in the opposite direction from what was expected. The assumption of flow direction is sometimes wrong. Verify with other system readings. With a meter measuring backward flow, the DP signal will be approximately 30% too high.
	V-Cone	Foreign object lodged in meter. This will increase the restriction of the meter and raise the DP. Remove the meter and visually inspect.
	Gauge lines	Leak on low pressure gauge line. Perform a leak check from the meter to the transmitter.
	Transmitter	Leak on low pressure vent valve. Perform a leak check on valve.
	Transmitter	Zero point has shifted positively. This will cause errors more pronounced at the low end of the transmitter range. Verify by closing the manifold side valves and opening the center valve. The reading should go to zero (4 mA). Recalibrate if necessary.
Signal too low	Manifold	Manifold is cross-vented. The center valve must be closed. To test, close the two side valves and watch the transmitter signal. If the signal goes to zero (4 ma), the center valve is not closed completely.
	Gauge lines	Leak on high pressure gauge line. Perform a leak check from the meter to the transmitter.
	Transmitter	Leak on high pressure vent valve. Perform a leak check on valve.
	Transmitter	Zero point has shifted negatively. This will cause errors more pronounced at the low end of the transmitter range. Verify by closing the manifold side valves and opening the center valve. The reading should go to zero (4 mA). Recalibrate if necessary.
	Transmitter	DP span is set too high. Use pressure calibrator or handheld communicator to verify span point.
	Transmitter / flow computer	Neither the transmitter nor flow computer is set to take the square root of the signal. The signal will be correct at 20 mA. The negative error will increase dramatically as the signal decreases from 20 mA. Use a loop calibrator to check 12 mA point.
Unsteady signal	V-Cone	Partially full pipe occurring (liquids only). Periods with a partially full pipe will cause erratic readings. See above for details.
	Transmitter	Power supply not supplying enough power to create signal. Check power specifications for transmitter.
Slow response time	Transmitter	Dampening.
Sudden change in readings	V-Cone	Foreign object lodged in meter. This will increase the restriction of the meter and raise the DP. Remove the meter and visually inspect.
	Gauge lines	Leaks have started.

Recommended Equipment for Troubleshooting A V-Cone Installation On-Site:

1. 4 to 20 mA loop simulator – highly recommended
2. Digital multimeter: with VDC, I, and Ω measurements
3. Pressure calibrator
4. Handheld Communicator for smart instruments
5. Hand tools: Screwdriver(+), Screwdriver (–), 12 inch crescent wrench, 4 inch crescent wrench

Some suggestions for equipment manufacturers and their products follow. A wide range of products is available. We do not necessarily endorse the following products or companies. Please choose a product that fits your needs and resources.

www.fluke.com

740 Series Documenting Process Calibrators
718 Pressure Calibrator
717 30G Pressure Calibrator
716 Pressure Calibrator
715 Volt/mA Calibrator
714 Thermocouple Calibrator
713 30G/100G Pressure Calibrator
712 RTD Calibrator
787 Process Meter (combination digital multimeter and loop calibrator)
705 Loop Calibrator

9.0 ExactSteam V-Cone Literature

9.1 ExactSteam V-Cone Documentation

30122-58	IOM ExactSteam V-Cone ENGLISH
30122-63	SPEC SHEET ExactSteam V-Cone (NOR-AM/ENG)
30122-65	ExactSteam V-Cone BROCHURE
30122-68	IOM ExactSteam V-Cone FRENCH
30122-69	IOM ExactSteam V-Cone SPANISH
30122-70	IOM ExactSteam V-Cone PORTUGUESE
30122-71	IOM ExactSteam V-Cone ITALIAN
30122-72	IOM ExactSteam V-Cone GERMAN
30122-73	SPEC SHEET ExactSteam V-Cone (LAT-AM/ENG)
30122-74	SPEC SHEET ExactSteam V-Cone (EU/ENG)
30122-75	SPEC SHEET ExactSteam V-Cone (LAT-AM/SPA)
30122-76	SPEC SHEET ExactSteam V-Cone (LAT-AM/PORT)
30122-77	SPEC SHEET ExactSteam V-Cone (EU/SPA)
30122-78	SPEC SHEET ExactSteam V-Cone (EU/PORT)
30122-79	SPEC SHEET ExactSteam V-Cone (EU/ITAL)
30122-80	SPEC SHEET ExactSteam V-Cone (EU/GER)
30122-81	SPEC SHEET ExactSteam V-Cone (EU/FREN)

10.0 Appendices

10.1 V-Cone Installation Guide: Upstream and Downstream Minimum Straight Pipe Run Recommendations

Table 1: McCrometer Installation Recommendations

For gas metering at a Reynolds number (Re) value > 200,000, and for β greater than or equal to 0.70 add 1D

Size Range	Obstruction	Up Stream	Down Stream
All Sizes	1 Elbow	1D	1D
	2 Elbows	1D	1D
	Tees	1D	1D
	Butterfly Valve (control valve)	Not Preferred Position	Valve Downstream 1D
	Butterfly Valve (shutoff valve)	2D	1D
	Full port Ballvalve (shutoff)	1D	1D
	Heat Exchanger (Depends on Type)	1D	0D
	Expander (0.67D to D) over a length of 2.5D	2D	1D
	Reducer (3D to D) over a length of 3.5D	0D	0D

Note: The meter and adjoining pipe should have equal IDs.

Table 2: McCrometer Installation Recommendations

For liquid metering and gases at a Reynolds number (Re) value less than or equal to 200,000, and for β greater than or equal to 0.70 add 1D

Size Range	Obstruction	Up Stream	Down Stream
All Sizes	1 Elbow	0D	0D
	2 Elbows	0D	0D
	Tees	0D	0D
	Butterfly Valve (control valve)	Not Preferred Position	Valve Downstream 1D
	Butterfly Valve (shutoff valve)	2D	0D
	Full port Ballvalve (shutoff)	0D	0D
	Heat Exchanger (Depends on Type)	0D	0D
	Expander (0.67D to D) over a length of 2.5D	2D	1D
	Reducer (3D to D) over a length of 3.5D	0D	0D

Note: The meter and adjoining pipe should have equal IDs.

Table 3: ISO Installation Recommendations, as shown in ISO 5167, Part 5

Disturbance	Beta	Upstream (Measured from HP Port, Key 2)	Downstream (Measured from Beta Edge Key 3)
Single Bend, 6.2.2	$0.45 \leq \beta \leq 0.65$	3D	2D
	$0.65 \leq \beta \leq 0.75$	6D	2D
2 Bends Out of Plane, 6.2.3	$0.45 \leq \beta \leq 0.65$	3D	2D
	$0.65 \leq \beta \leq 0.75$	6D	2D
Concentric Expander 0.75D to D, 6.2.4	All	3D	2D
Partially Close Valves, 6.2.5	All	10D	2D
Fully Open Valves, 6.2.5	All	0D	2D

Note: The upstream measurement is taken from the high pressure tap, not the upstream flange. The downstream measurement is taken from the cone beta edge, not the downstream flange.

MANUFACTURER'S WARRANTY

This Warranty shall apply to and be limited to the original purchaser consumer of any McCrometer product. Meters or instruments defective because of faulty material or workmanship will be repaired or replaced, at the option of McCrometer, Inc., free of charge, FOB the factory in Hemet, California, within a period of one (1) year from the date of delivery.

Repairs or modifications by others than McCrometer, Inc. or their authorized representatives shall render this Warranty null and void in the event that factory examination reveals that such repair or modification was detrimental to the meter or instrument. Any deviations from the factory calibration require notification in writing to McCrometer, Inc. of such recalibrations or this warranty shall be voided.

In case of a claim under this Warranty, the claimant is instructed to contact McCrometer, Inc. 3255 West Stetson Ave., Hemet, California 92545, and to provide an identification or description of the meter or instrument, the date of delivery, and the nature of the problem.

The Warranty provided above is the only warranty made by McCrometer, Inc. with respect to its products or any parts thereof and is made expressly in lieu of any other warranties, by course of dealing, usages of trade or otherwise, expressed or implied, including but not limited to any implied warranties of fitness for any particular purpose or of merchantability under the uniform commercial code. It is agreed this warranty is in lieu of and buyer hereby waives all other warranties, guarantees or liabilities arising by law or otherwise. Seller shall not incur any other obligations or liabilities or be liable to buyer, or any customer of buyer for any anticipated or lost profits, incidental or consequential damages, or any other losses or expenses incurred by reason of the purchase, installation, repair, use or misuse by buyer or third parties of its products (including any parts repaired or replaced); and seller does not authorize any person to assume for seller any other liability in connection with the products or parts thereof. This Warranty cannot be extended, altered or varied except by a written instruction signed by seller and buyer.

This Warranty gives you specific legal rights, and you may also have other rights which vary from state to state.

McCrometer, Inc. reserves the right to make improvements and repairs on product components which are beyond the warranty period at the manufacturer's option and expense, without obligation to renew the expired warranty on the components or on the entire unit. Due to the rapid advancement of meter design technology, McCrometer, Inc. reserves the right to make improvements in design and material without prior notice to the trade.

All sales and all agreements in relation to sales shall be deemed made at the manufacturer's place of business in Hemet, California and any dispute arising from any sale or agreement shall be interpreted under the laws of the State of California.

IOTAFLOW
SYSTEMS PVT. LTD

Conical shaped Flow meter User Manual

Contact Us:-

IOTAFLOW SYSTEMS PVT. LTD.

C-2/13, Mayapuri Industrial Area
Phase-II, New Delhi - 110064
Call: +91-9910693866
+91-9779085987
Email: contact@iotaflow.com

Specifications subject to change without prior notice. © Iotaflow Systems Pvt. Ltd.

" If You Want To Manage It, Measure It "

www.iotaflow.com